SIERRA PACIFIC WINDOWS

Multi-Slide Stacking Door
Installation/Non-Impact

| | |
|---|---|
| CCL Listing #429-H-563.30 | Intertek Test Report #: L2480.01-901-47 |

Aluminum Clad Wood Multi-Slide XXXXO Door
Recessed Frame Installation / WDMA Instructions / Non-Impact

| | | |
|---|---|---|
| SHEET: 1 OF 2 | | DRAWN BY: PS/TH |

TEST REPORT SUMMARY:

- STACKING XXXXO UNIT, MAXIMUM BASIC UNIT FRAME SIZE: **284" (7214mm) x 110" (2794mm)**
- OVERALL DESIGN PRESSURE: **+40.10 psf w/o Reinforcement**
- OVERALL DESIGN PRESSURE: **±45.11 psf w/Reinforcement**
- STRUCTURAL TEST PRESSURE: **+60.15 psf w/o Reinforcement**
- STRUCTURAL TEST PRESSURE: **±67.67 psf w/Reinforcement**
- RATING: **CLASS LC-PG35 with 2.125 Inside Sill Stop**

## 5 PANEL STACKING XXXXO ELEVATION SHOWING FASTENER LOCATION & SPACING

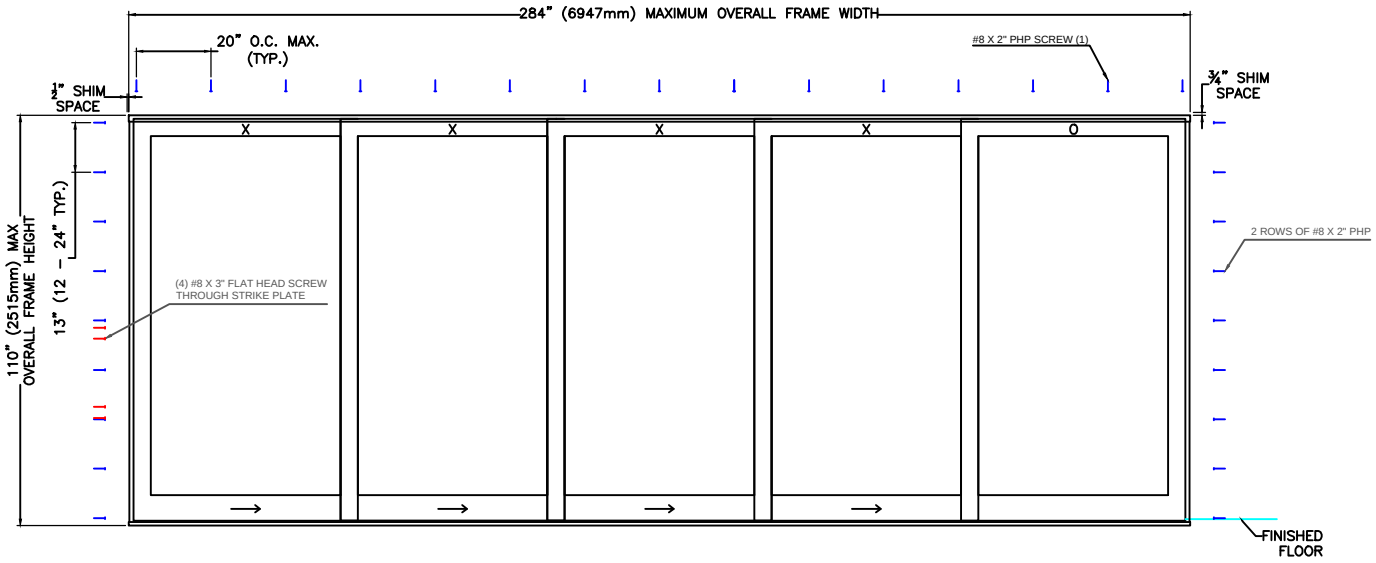


## INSTALLATION NOTES:

1. USE 2" X _ PINE FOR ROUGH OPENING
2. PLACE WOOD SHIMS EVERY 6-10"
3. 3/4" MAXIMUM SHIM SPACE AT HEAD AND 1/2" AT SIDE JAMB
4. INSTALL #8 X 2" PAN HEAD SCREWS SPACED APPROXIMATELY 20" ON CENTER, THROUGH THE FRAME CLAD INTO R.O. FRAMING. 3/8" MINIMUM EDGE DISTANCE.
5. 1" MINIMUM FASTENER EMBEDMENT INTO ROUGH FRAMING MATERIAL
6. MAXIMUM DOOR SIZE: B.U.S. (Basic Unit Size) =
   -SINGLE UNIT, MAXIMUM BASIC UNIT FRAME SIZE:
   **284" (7214mm) x 110" (2794mm)**
7. THIS INFORMATION APPLIES TO XXXXO AND OXXXX AND SMALLER UNITS
8. INSTALL 2 ROWS OF #8 X 2" PAN HEAD SCREWS SPACED 12 - 24" ON CENTER THROUGH THE SIDE JAMB AND INTO THE FRAMING MATERIAL
9. INSTALL 4 EACH #8 X 3" FLAT HEAD SS SCREWS THROUGH THE LOCK STRIKE PLATE
10. PLACE CLOSED CELL BACKER ROD AND APPLY A CONTINUOUS BEAD OF SEALANT BETWEEN THE FRAME CLAD AND THE ROUGH OPENING, ON TOP AND BOTH SIDES

GENERAL INSTALLATION NOTES:

- Check rough opening for proper size, plumb, level and square.
- Make all necessary adjustments to ensure rough opening is plumb, level & square.
- Sill must be flat, level and capable of supporting the weight of the unit.
- Opening must allow a maximum of 3/4" shim space at head and ½" at side jambs.
- Consult full installation instructions found on the Sierra Pacific web site, www.sierrapacificwindows.com, for all recommended installation procedures.
- Wood buck, framing, fasteners, sealant and all wall system materials are provided **by others**

**FLASHING**

- For units that have to meet a specific DP (Design Pressure) rating, any kind of building wrap must be folded and taped away from each rough opening before the unit is installed. Unit must come in contact with the building's bare sheathing. A bead of silicone must be applied to the backside of the nail fin where it meets the unit, at head and jambs.
- Once unit is installed and flashed properly, the building wrap must be reapplied and trimmed flush with the unit's exterior. A bead of sealant must be placed along the seam joint of the building wrap and the unit. Tape the corner cuts in the building wrap. See full window installation brochure for complete flashing details.

Installation requirements may vary in particular locations and in other types of construction. Proper installation is essential, and Sierra Pacific Windows, recommends consultation with an AAMA Certified Installer, or other qualified, registered building professional before installation of any Sierra Pacific product. Proper installation of Sierra Pacific products is the responsibility of the installer. Sierra Pacific is not responsible for proper installation. Sierra Pacific is not responsible for the design of, conditions in, or performance of building construction beyond the perimeters of the Sierra Pacific units. Sierra Pacific is not responsible for proper integration of the Sierra Pacific units with the weather-repellent systems of the building.

SIERRA PACIFIC WINDOWS

# Lift and Slide Stacking Door Installation/Non-Impact

CCL Listing #429-H-563.30

Intertek Test Report #: L2480.01-901-47

## Aluminum Clad Wood Multi-Slide XXXXO Door Recessed Frame Installation / WDMA Instructions / Non-Impact

SHEET: 2 OF 2

DRAWN BY: PS/TH

**TEST REPORT SUMMARY:**

- STACKING XXXXO UNIT, MAXIMUM BASIC UNIT FRAME SIZE: **284" (7214mm) x 110" (2794mm)**
- OVERALL DESIGN PRESSURE: **+40.10 psf w/o Reinforcement**
- OVERALL DESIGN PRESSURE: **±45.11 psf w/Reinforcement**
- STRUCTURAL TEST PRESSURE: **+60.15 psf w/o Reinforcement**
- STRUCTURAL TEST PRESSURE: **±67.67 psf w/Reinforcement**
- RATING: **CLASS LC-PG35 with 2.125" Inside Sill Stop**

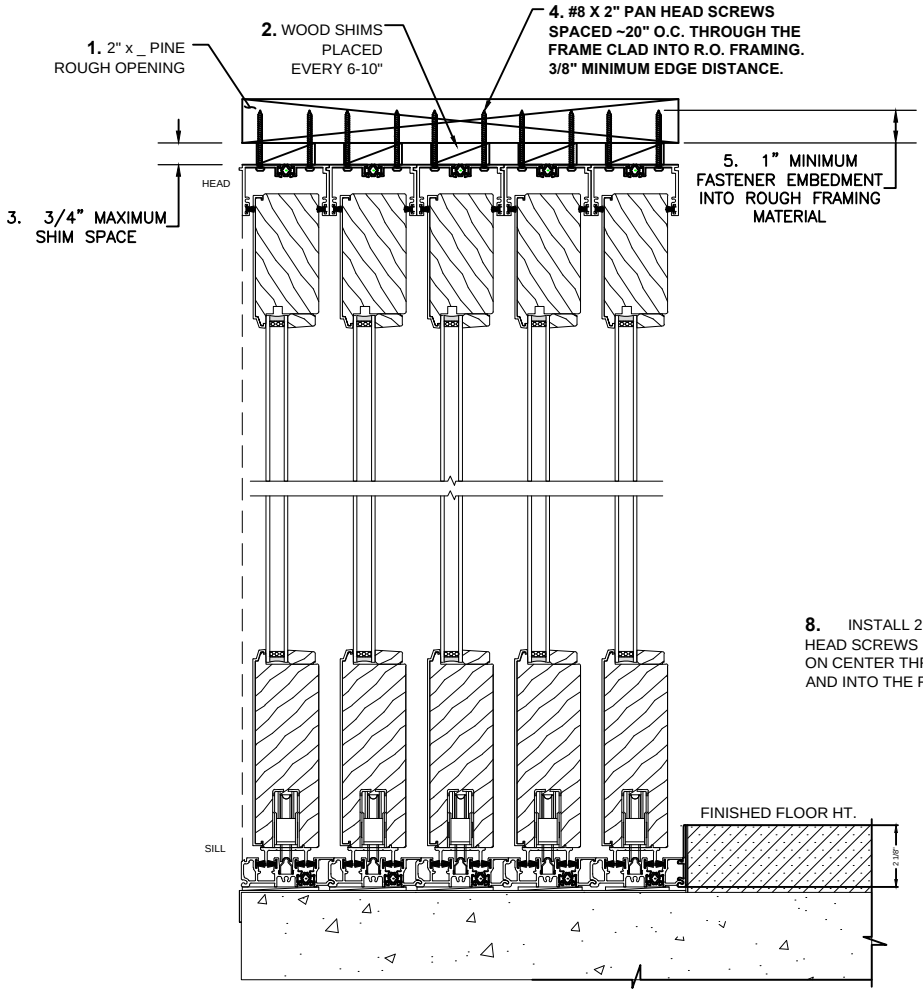


VERTICAL SECTION

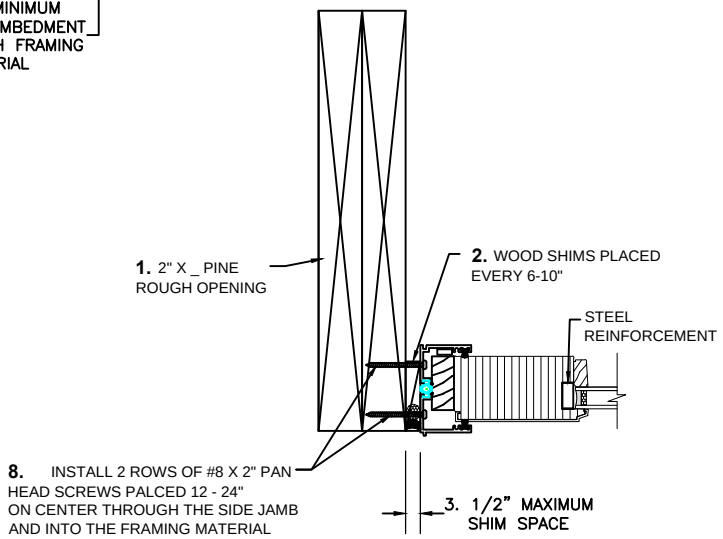


HORIZ. SECTION (SIDE JAMB)

## INSTALLATION NOTES:

1. USE 2" X _ PINE FOR ROUGH OPENING
2. PLACE WOOD SHIMS EVERY 6-10"
3. 3/4" MAXIMUM SHIM SPACE AT HEAD AND 1/2" AT SIDE JAMB
4. INSTALL #8 X 2" PAN HEAD SCREWS SPACED APPROXIMATELY 20" ON CENTER, THROUGH THE FRAME CLAD INTO R.O. FRAMING. 3/8" MINIMUM EDGE DISTANCE.
5. 1" MINIMUM FASTENER EMBEDMENT INTO ROUGH FRAMING MATERIAL
6. MAXIMUM DOOR SIZE: B.U.S. (Basic Unit Size) =
   -SINGLE UNIT, MAXIMUM BASIC UNIT FRAME SIZE:
   **284" (7214mm) x 110" (2794mm)**
7. THIS INFORMATION APPLIES TO XXXXO AND OXXXX AND SMALLER UNITS
8. INSTALL 2 ROWS OF #8 X 2" PAN HEAD SCREWS SPACED 12 - 24" ON CENTER THROUGH THE SIDE JAMB AND INTO THE FRAMING MATERIAL
9. INSTALL 4 EACH #8 X 3" FLAT HEAD SS SCREWS THROUGH THE LOCK STRIKE PLATE
10. PLACE CLOSED CELL BACKER ROD AND APPLY A CONTINUOUS BEAD OF SEALANT BETWEEN THE FRAME CLAD AND THE ROUGH OPENING, ON TOP AND BOTH SIDES

Installation requirements may vary in particular locations and in other types of construction. Proper installation is essential, and Sierra Pacific Windows, recommends consultation with an AAMA Certified Installer, or other qualified, registered building professional before installation of any Sierra Pacific product. Proper installation of Sierra Pacific products is the responsibility of the installer. Sierra Pacific is not responsible for proper installation. Sierra Pacific is not responsible for the design of, conditions in, or performance of building construction beyond the perimeters of the Sierra Pacific units. Sierra Pacific is not responsible for proper integration of the Sierra Pacific units with the weather-repellent systems of the building.